7-SERIES PNEUMATIC

8,000–17,500 LBS

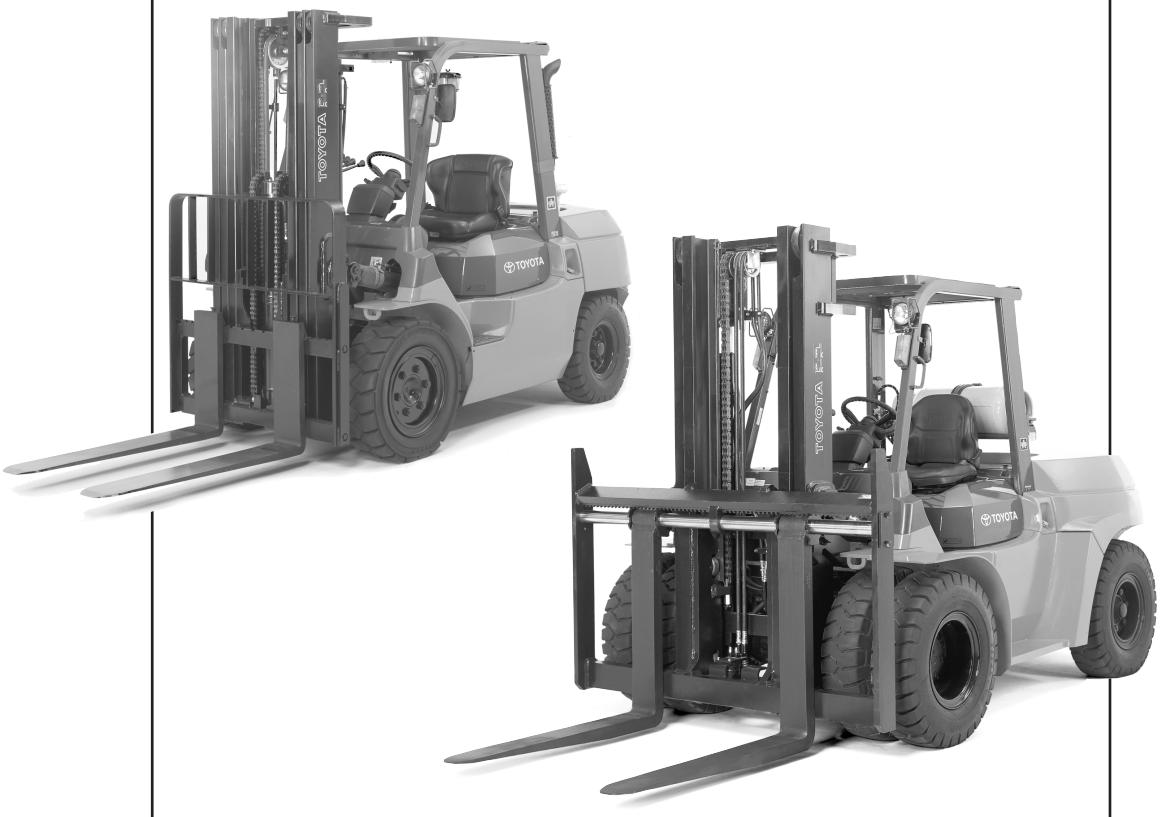

SPECIFICATIONS

TOYOTA

INDUSTRIAL EQUIPMENT

8,000 – 17,500 lbs. Standard Features

SAFETY

- EPA/CARB certified engine with 3-way closed loop catalytic muffler system
- Double action hand operated parking brake
- Electric horn
- Neutral start safety switch
- System of Active Stability (SAS)
  - *Active control rear stabilizer (n/a for dual drive tire configurations)*
  - *Active mast control function*
  - *SAS operation monitor*
- Asbestos free components
- High visibility overhead guard
- Low noise emissions
- Key lowering interlock

PERFORMANCE

- GM 4.3L, 262 ci, V6 gasoline engine
- Toyota 4.6L, 281 ci, inline 6 cyl diesel engine (13Z)
- Planetary drive axle
- Centralized Hydraulic Power System (CHPS)
  - *Power brakes*
  - *Hydrostatic power steering*
  - *Hydraulic functions*
- Hydraulic valve lifters (GM engine)
- Reverse-phase type 2 stator torque converter
  - *4 element, 2-stage, 3-phase type*
  - *8:1 torque multiplication*
- Class III hook carriage (8,000, 9,000, and 10,000 lb. models)
- Class IV hook carriage (11,000, 13,500 and 17,500 lb. models)
- Hydraulic oil cooler (on specified models)
- Dual Drive Tires (13,500, 15,500 and 17,500 lb. models)
- Rubber mounted high-efficiency radiator
- Radiator lint screen
- 8-inch Cyclone air cleaner
- External Air Intake located high on overhead guard leg
- Diesel sedimentor (water separator)
- Diesel suction filter
- Alternator with internal regulator
- Sealed Starter (GM engine)
- Air cleaner discharge valve
- Transmission oil cooler
- Transistorized ignition (GM engine)
- UL "G" gasoline model
- UL "D" diesel model
- 3-Way hydraulic control valve
- Anti-restart ignition key switch

OPERABILITY AND ERGONOMICS

- Ergonomically designed instrument display
- Integrated monitoring system
  - *Digital hour meter*
  - *Battery charge warning lamp*
  - *Engine coolant temperature gauge*
  - *Engine oil pressure warning lamp*
  - *Clogged air filter warning lamp*
  - *Fuel gauge (gasoline/diesel only)*
  - *SAS warning lamp*
  - *Swing lock cylinder activation lamp*
- Automatic fork leveling
- Memory tilt steering column
- Two spoke steering wheel
- Heavy-duty non-slip floor mat
- 4-Way vinyl semi-suspension seat
  - *Fore/aft adjustment*
  - *Weight adjustment*
  - *Back tilt adjustment*
  - *Lumbar support adjustment*
- Large hood mounted clipboard
- Pen/Pencil/Cup holder
- Adjustable front headlights and guards
- Electric shift control
- Combination headlight, turn signal lever
- Sealed engine hood compartment (steel) with sound and heat insulation
- Non-slip hand pad on engine hood
- Dual operator assist grips
- Low wide entry steps
- 2-Stage limited free lift mast (V-Mast)
- Wide view carriage bars
- Load backrest extension
- Pendant mounted pedals
- Independent brake & inching pedals
- Draw bar pin (except BCS models)
- Rubber mounted hydraulic control valve
- Cowl mounted hydraulic control levers with rubber boot covers

SERVICEABILITY

- Easy access no-tools floorboard
- Engine hood assist damper with lock device
- Low maintenance battery
- Easy access fuse panel box
- Fully opening Engine Compartment hood
- Easy access engine air filter
- Quick removal radiator cover and lint screen

8,000 – 17,500 lbs. Optional Equipment

- EZ-Pedal foot directional control
- Travel Speed Control System (selected models)
- Steel cab enclosure
- 2-stage full free lift mast (FV)
- 3-stage full free lift mast (FSV)
- LPG fuel system configurations with swing out tank bracket and one touch latch system
  - *UL-LP*
  - *UL-LPS*
  - *UL-LP/G dual fuel*
- Optional swing down feature for LPG tank bracket
- Engine protection system (selected models)
- Dual fuel system (gasoline/LPG)
- Hang on sideshifter
- Pin-type carriage & attachments (select models)
  - *Pin-type carriage with pin fork lock collars*
  - *Integral pin-type sideshifter*
  - *Integral pin-type sideshifting fork positioner*
- LPG low-fuel warning indicator
- Tilt cylinder boots (selected models)
- Keyless ignition switch
- Fire extinguisher
- Front combination lights
- Rear working light
- Mast mounted headlights (heavy duty)
- Strobe light (yellow, clear, red & blue)
- High mount rear combination light bar
- Back-up alarm
- Rear view mirrors (left & right)
- Upswept exhaust system
- 4-Way hydraulic control valve
- 3-Way full suspension seat with anti-cinching seat belt
  - *Fore/aft adjustment*
  - *Weight adjustment*
  - *Tilt adjustment*
- 4-Way cloth semi-suspension seat
- Accumulator
- O.K. Monitor
- High mount Pre-Cleaner for air intake
- Box-fin radiator
- Cooling fan booster
- Sealed alternator (standard with LPS)
- Tapered forks
- Fully tapered and polished forks
- Various load backrest extension heights
- Various carriage widths
- Adjustable dB Smart Alarm
- Combination inching/brake pedal (standard with EZ-Pedal option)
- Dual drive tires (selected models)
- Transmission oil temp gauge
- Solid pneumatic tires (front & rear)
- 12V-60A high capacity alternator
- OHG mounted pencil & tape holder
- Operator compartment light
- Tilt cylinder boots (selected models)
- Dual element Cyclone air cleaner

8,000 – 11,000 lbs. Truck Specifications

Models			7FGU35	7FDU35	7FGKU40	7FDKU40	7FGU45	7FDU45	7FGAU50	7FDAU50
Load Capacity (at 24" Load Center)		lbs.	8000		9000		10,000		11,000	
Body/Frame Construction			Welded steel body and frame							
Steering Type			Hydrostatic power steering							
Brakes			Hydraulic (foot)							
Transmission	Type		Reverse-phase type 2 stator torque converter with 8:1 torque multiplication							
	Speed (fwd/rev)		1/1							
Engine	Make/Model		GM 4.3L	TOYOTA 13Z	GM 4.3L	TOYOTA 13Z	GM 4.3L	TOYOTA 13Z	GM 4.3L	TOYOTA 13Z
	Type		6-cyl. OHV gasoline	6-cyl. OHV diesel	6-cyl. OHV gasoline	6-cyl. OHV diesel	6-cyl. OHV gasoline	6-cyl. OHV diesel	6-cyl. OHV gasoline	6-cyl. OHV diesel
Piston Displacement		cu. in.	262	281	262	281	262	281	262	281
Rated Horsepower - Net rpm		SAE HP	85 @ 2350 rpm	76 @ 2200 rpm	85 @ 2350 rpm	76 @ 2200 rpm	85 @ 2350 rpm	76 @ 2200 rpm	85 @ 2350 rpm	76 @ 2200 rpm
Rated Torque - Net rpm		SAE ft-lb.	217 @ 1200 rpm	192 @ 1600 rpm	217 @ 1200 rpm	192 @ 1600 rpm	217 @ 1200 rpm	192 @ 1600 rpm	217 @ 1200 rpm	192 @ 1600 rpm

EXTERIOR DIMENSIONS

Models				7FGU35	7FDU35	7FGKU40	7FDKU40	7FGU45	7FDU45	7FGAU50	7FDAU50
A	Maximum Fork Height (MFH)		in.	120	120	120	120	120	120	120.5	120.5
B	Mast Lowered Height		in.	83	83	83	83	86.5	86.5	96.5	96.5
C	Free Lift		in.	4.3	4.3	4.3	4.3	4.5	4.5	4.7	4.7
D	Load Distance*		in.	20.5	20.5	20.5	20.5	22.4	22.4	23.0	23.0
E	Wheelbase		in.	72.4	72.4	72.4	72.4	78.7	78.7	78.7	78.7
F	Fork Size (TxWxL)		in.	2x6x42	2x6x42	2x6x42	2x6x42	2x6x42	2x6x42	2.6x6x48	2.6x6x48
G	Length to Fork Face		in.	115	115	117.1	117.1	123.0	123.0	125.4	125.4
H	Overhead Guard Height		in.	86.2	86.2	86.2	86.2	90.0	90.0	90.0	90.0
I	Tilt Range (Fwd/Bwd)		deg	6/12	6/12	6/12	6/12	6/12	6/12	6/12	6/12
J	Outside Turning Radius		in.	101.8	101.8	104.3	104.3	108.3	108.3	110.2	110.2
K	Rt Angle Stacking Aisle Width**		in.	122.2	122.2	124.8	124.8	130.7	130.7	133.2	133.2
L	Overall Width		in.	57.1	57.1	57.1	57.1	57.1	57.1	57.1	57.1
M	Carriage Width		in.	46	46	46	46	46	46	46	46
N	Std Tread Width (Front/Rear)		in.	45.3/43.3	45.3/43.3	45.3/43.3	45.3/43.3	45.3/43.3	45.3/43.3	45.3/43.3	45.3/43.3
O	Underclearance	Minimum w/ load	in.	4.7	4.7	4.7	4.7	4.7	4.7	4.7	4.7
		Center of W.B.	in.	7.5	7.5	7.5	7.5	8.3	8.3	8.3	8.3

PERFORMANCE DATA

				7FGU35	7FDU35	7FGKU40	7FDKU40	7FGU45	7FDU45	7FGAU50	7FDAU50
Maximum Travel Speed	Full Load	Forward	mph	13.7	13.7	13.7	13.7	13.7	13.7	13.7	13.7
		Reverse	mph	13.7	13.7	13.7	13.7	13.7	13.7	13.7	13.7
	No Load	Forward	mph	15.0	15.0	15.0	15.0	15.0	15.0	15.0	15.0
		Reverse	mph	15.0	15.0	15.0	15.0	15.0	15.0	15.0	15.0
Lifting Speeds (V mast)		Full Load	fpm	101	101	101	101	87.1	95.0	87.1	95.0
		No Load	fpm	109	109	109	109	95	103	95	103
Lowering Speeds (V mast)		Full Load	fpm	99.0	99.0	99.0	99.0	99.0	99.0	99.0	99.0
		No Load	fpm	109	109	109	109	99.0	99.0	99.0	99.0
Maximum Drawbar Pull		Full Load	lbs	7900	8350	7900	8350	7900	8350	7900	8350
		No Load	lbs	3090	3090	3090	3090	3750	3750	3970	3970
Maximum Gradeability		Full Load	%	42	43	38	39	34	35	31	32
		No Load	%	22	21	19	19	22	22	22	22

TRUCK WEIGHTS

				7FGU35	7FDU35	7FGKU40	7FDKU40	7FGU45	7FDU45	7FGAU50	7FDAU50
Gross Weight (empty)			lbs	12460	12740	13320	13610	14580	14930	15950	16300
Weight Distribution	Full Load	Front	lbs	18160	18200	19550	19600	21940	22070	24300	24430
		Rear	lbs	2300	2540	2770	3010	2640	2860	2650	2870
	No Load	Front	lbs	5250	5290	5030	5070	6040	6180	6730	6860
		Rear	lbs	7210	7450	8290	8540	8540	8750	9220	9440

FUEL CAPACITY

Gasoline Fuel Tank		US gal	27.7	27.7	27.7	27.7	31.7	31.7	31.7	31.7

ATTACHMENT

Auxiliary Function Pressure Relief		psi	2630	2630	2630	2630	2630	2630	2630	2630
Auxiliary Function Flow Rate (max)		gpm	29	30	29	30	29	33	29	33

TIRES

Type (front/rear)		Pneumatic/Pneumatic			
Size	Drive (Front)	28x12-15-20PR (I)	28x12-15-20PR (I)	32x12-15-20PR (I)	32x12-15-20PR (I)
	Steer (Rear)	7.00-12-12PR (I)	7.00-12-12PR (I)	7.00-12-12PR (I)	7.00-12-12PR (I)

* *Centerline of front axle to front face of forks*

** *Add load length and clearance*

13,500 – 17,500 lbs. Truck Specifications

Models			7FGU60	7FDU60	7FGU70	7FDU70	7FGU80	7FDU80
Load Capacity (at 24" Load Center)		lbs.	13,500		15,500		17,500	
Body/Frame Construction			Welded steel body and frame					
Steering Type			Hydrostatic power steering					
Brakes			Hydraulic (foot)					
Transmission	Type		Reverse-phase type 2 stator torque converter with 8:1 torque multiplication					
	Speed (fwd/rev)		1/1					
Engine	Make/Model		GM 4.3L	TOYOTA 13Z	GM 4.3L	TOYOTA 13Z	GM 4.3L	TOYOTA 13Z
	Type		6-cyl. OHV gasoline	6-cyl. OHV diesel	6-cyl. OHV gasoline	6-cyl. OHV diesel	6-cyl. OHV gasoline	6-cyl. OHV diesel
Piston Displacement		cu. in.	262	281	262	281	262	281
Rated Horsepower - Net rpm		SAE HP	89 @ 2600 rpm	81 @ 2300 rpm	89 @ 2600 rpm	81 @ 2300 rpm	89 @ 2600 rpm	81 @ 2300 rpm
Rated Torque - Net rpm		SAE ft-lb.	217 @ 1200 rpm	192 @ 1600 rpm	217 @ 1200 rpm	192 @ 1600 rpm	217 @ 1200 rpm	192 @ 1600 rpm

EXTERIOR DIMENSIONS

Models				7FGU60	7FDU60	7FGU70	7FDU70	7FGU80	7FDU80
A	Maximum Fork Height (MFH)		in.	120.5	120.5	120.5	120.5	121	121
B	Mast Lowered Height		in.	96.9	96.9	96.9	96.9	102.8	102.8
C	Free Lift		in.	4.9	4.9	4.9	4.9	5.1	5.1
D	Load Distance*		in.	23.2	23.2	23.2	23.2	23.4	23.4
E	Wheelbase		in.	86.6	86.6	86.6	86.6	86.6	86.6
F	Fork Size (TxWxL)		in.	2.6x6x48	2.6x6x48	2.6x6x48	2.6x6x48	2.8x6x48	2.8x6x48
G	Length to Fork Face		in.	131.9	131.9	133.9	133.9	137.0	137.0
H	Overhead Guard Height		in.	90.4	90.4	90.4	90.4	90.4	90.4
I	Tilt Range (Fwd/Bwd)		deg	6/10	6/10	6/10	6/10	6/10	6/10
J	Outside Turning Radius		in.	121.2	121.2	123.2	123.2	125.9	125.9
K	Rt Angle Stacking Aisle Width**		in.	144.5	144.5	146.4	146.4	149.4	149.4
L	Overall Width		in.	77.4	77.4	77.4	77.4	77.4	77.4
M	Carriage Width		in.	67	67	67	67	67	67
N	Std Tread Width (Front/Rear)		in.	56.7/57.5	56.7/57.5	56.7/57.5	56.7/57.5	56.7/57.5	56.7/57.5
O	Underclearance	Minimum w/ load	in.	5.1	5.1	5.1	5.1	5.1	5.1
		Center of W.B.	in.	8.7	8.7	8.7	8.7	8.7	8.7

PERFORMANCE DATA

Maximum Travel Speed	Full Load	Forward	mph	11.8	11.8	11.8	11.8	11.8	11.8
		Reverse	mph	11.8	11.8	11.8	11.8	11.8	11.8
	No Load	Forward	mph	13.0	13.0	13.0	13.0	13.0	13.0
		Reverse	mph	13.0	13.0	13.0	13.0	13.0	13.0
Lifting Speeds (V mast)		Full Load	fpm	80.8	80.8	80.8	80.8	72.9	72.9
		No Load	fpm	86.7	86.7	86.7	86.7	85.0	85.0
Lowering Speeds (V mast)		Full Load	fpm	98.5	98.5	98.5	98.5	98.5	98.5
		No Load	fpm	92.6	92.6	92.6	92.6	94.6	94.6
Maximum Drawbar Pull		Full Load	lbs	10350	10350	10350	10350	10150	10150
		No Load	lbs	3980	3980	3825	3825	3665	3665
Maximum Gradeability		Full Load	%	34	34	30	30	26	26
		No Load	%	23	23	20	20	18	18

TRUCK WEIGHTS

Gross Weight (empty)			lbs	18300	18540	19800	20020	21450	21670
Weight Distribution	Full Load	Front	lbs	29060	29170	31980	32090	34930	35040
		Rear	lbs	2740	2870	3320	3430	4020	4130
	No Load	Front	lbs	8200	8310	8030	8140	7850	7960
		Rear	lbs	10100	10230	11770	11880	13600	13710

FUEL CAPACITY

Gasoline Fuel Tank	US gal	31.7	31.7	31.7	31.7	31.7	31.7

ATTACHMENT

Auxiliary Function Pressure Relief	psi	2990	2990	2990	2990	2990	2990
Auxiliary Function Flow Rate (max)	gpm	35	35	35	35	35	35

TIRES

Type (front/rear)		Pneumatic/Pneumatic		
Size	Drive (Front)	8.25-15-12PR(I)	8.25-15-12PR(I)	8.25-15-14PR(I)
	Steer (Rear)	8.25-15-12PR(I)	8.25-15-12PR(I)	8.25-15-14PR(I)

** Centerline of front axle to front face of forks*

*** Add load length and clearance*

8,000 – 17,500 lbs. Truck Dimensions

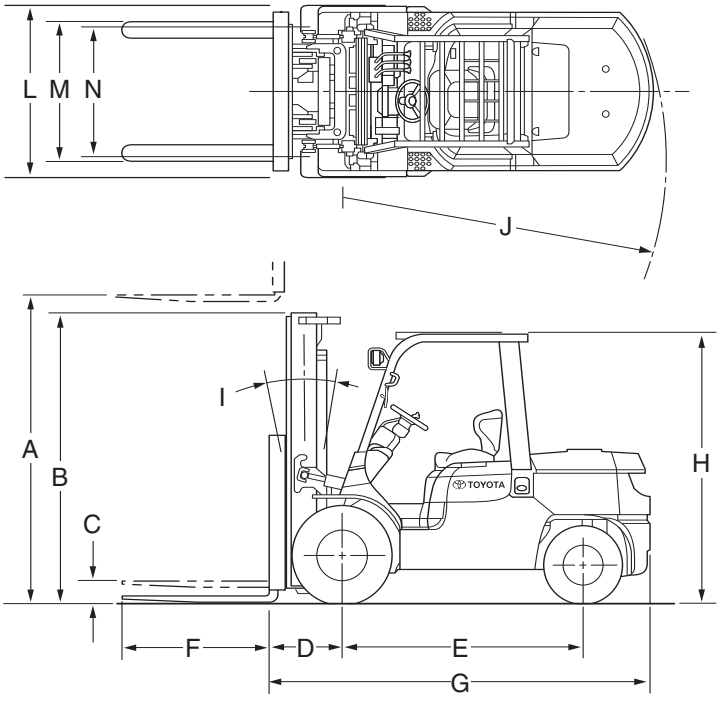

7FGAU50 model shown above

8,000 – 10,000 lbs. Mast Specifications

7FGU/DU35 & 7FGKU/DKU40

Mast Type	Maximum Fork Height (top of forks)	Overall Height			Free Lift		7FG/DU35						7FGKU/DKU40					
			Extended				Single Tire			Optional Dual Tires			Single Tire			Optional Dual Tires		
		Lowered	Without Load Backrest	With Load Backrest	Without Load Backrest	With Load Backrest	Tilt Range		Load Capacity @ 24" Load Center	Tilt Range		Load Capacity @ 24" Load Center	Tilt Range		Load Capacity @ 24" Load Center	Tilt Range		Load Capacity @ 24" Load Center
							FWD	BWD		FWD	BWD		FWD	BWD		FWD	BWD	
	in.	in.	in.	in.	in.	in.	deg.	deg.	lbs.	deg.	deg.	lbs.	deg.	deg.	lbs.	deg.	deg.	lbs.
V	120	83.1	151.6	166.2	4.3	4.3	6	12	8000	6	12	8000	6	12	9000	6	12	9000
	131.5	90.2	163.4	178.0	4.3	4.3	6	12	8000	6	12	8000	6	12	9000	6	12	9000
	139.5	94.1	171.3	185.9	4.3	4.3	6	12	8000	6	12	8000	6	12	9000	6	12	9000
	147.5	98.0	179.1	193.7	4.3	4.3	6	12	8000	6	12	8000	6	12	9000	6	12	9000
	159	107.9	190.9	205.5	4.3	4.3	6	12	8000	6	12	8000	6	12	9000	6	12	9000
	179	117.7	210.6	225.2	4.3	4.3	6	12	8000	6	12	8000	6	12	9000	6	12	9000
	198.5	127.6	230.3	244.9	4.3	4.3	6	6	7800	6	12	7800	6	6	7940	6	12	9000
	218.5	139.4	250.0	264.6	4.3	4.3	6	6	6950	6	12	7400	6	6	6100	6	12	8200
FV	120	83.1	152.8	166.2	50.4	35.0	6	12	8000	6	12	8000	6	12	9000	6	12	9000
	131.5	90.2	164.6	178.0	57.5	42.1	6	12	8000	6	12	8000	6	12	9000	6	12	9000
FSV	159	78.4	192.1	205.5	45.7	30.3	6	6	8000	6	6	8000	6	6	9000	6	6	9000
	171	83.1	203.9	217.3	50.4	35.0	6	6	8000	6	6	8000	6	6	9000	6	6	9000
	187	90.2	219.7	233.1	57.5	42.1	6	6	7700	6	6	7700	6	6	8800	6	6	9000
	198.5	94.1	231.5	244.9	61.4	46.0	6	6	7500	6	6	7500	6	6	7500	6	6	9000
	218.5	100.0	251.2	264.6	67.3	51.9	6	6	6200	6	6	7250	6	6	5730	6	6	9000
	238	107.9	270.9	284.3	75.2	59.8	6	6	4600	6	6	7050	6	6	4520	6	6	7280

Note: Height of standard load backrest is 48 in.

7FGU/7FDU45

Mast Type	Maximum Fork Height (top of forks)	Overall Height			Free Lift		Single Tire			Optional Dual Tires		
			Extended				Tilt Range		Load Capacity @ 24" Load Center	Tilt Range		Load Capacity @ 24" Load Center
		Lowered	Without Load Backrest	With Load Backrest	Without Load Backrest	With Load Backrest	FWD	BWD		FWD	BWD	
	in.	in.	in.	in.	in.	in.	deg.	deg.	lbs.	deg.	deg.	lbs.
V	120	86.6	146.7	166.2	4.3	4.3	6	12	10000	6	12	10000
	131.5	92.5	158.5	178.0	4.3	4.3	6	12	10000	6	12	10000
	139.5	96.5	166.3	185.8	4.3	4.3	6	12	10000	6	12	10000
	147.5	102.4	174.2	193.7	4.3	4.3	6	12	10000	6	12	10000
	159	110.2	186.0	205.5	4.3	4.3	6	12	10000	6	12	10000
	179	120.1	205.7	225.2	4.3	4.3	6	6	10000	6	12	10000
	198.5	129.9	225.4	244.9	4.3	4.3	6	6	8850	6	12	9750
	218.5	139.8	245.1	264.6	4.3	4.3	6	6	6200	6	12	8800
FV	120	86.6	147.2	166.1	59.5	38.6	6	12	10000	6	12	10000
	131.5	92.5	159.1	178.0	65.5	44.6	6	12	10000	6	12	10000
FSV	159	83.5	186.8	205.5	56.3	35.4	6	6	10000	6	6	10000
	171	86.6	198.6	217.3	59.5	38.6	6	6	9750	6	6	9750
	187	92.5	214.4	233.1	65.4	44.5	6	6	9300	6	6	9700
	198.5	96.5	226.2	244.9	69.3	48.4	6	6	8800	6	6	9450
	218.5	102.4	245.9	264.6	75.2	54.3	6	6	6650	6	6	9000
	238	110.2	265.6	284.3	83.1	62.2	6	6	5150	6	6	8600

Note: Height of standard load backrest is 48 in.

11,000 – 17,500 lbs. Mast Specifications

7FGAU/7FDAU50

Mast Type	Maximum Fork Height (top of forks)	Overall Height			Free Lift		Single Tire			Optional Dual Tires		
		Lowered	Extended				Tilt Range		Load Capacity @ 24" Load Center	Tilt Range		Load Capacity @ 24" Load Center
			Without Load Backrest	With Load Backrest	Without Load Backrest	With Load Backrest	FWD	BWD		FWD	BWD	
	in.	in.	in.	in.	in.	in.	deg.	deg.	lbs.	deg.	deg.	lbs.
V	120.5	96.5	153.7	174.6	4.9	4.9	6	12	11000	6	12	11000
	132	102.4	165.6	186.5	4.9	4.9	6	12	11000	6	12	11000
	140	110.2	173.4	194.3	4.9	4.9	6	12	11000	6	12	11000
	148	110.2	181.3	202.2	4.9	4.9	6	12	11000	6	12	11000
	159.5	120.1	193.1	214.0	4.9	4.9	6	12	11000	6	12	11000
	179.5	129.9	212.8	233.7	4.9	4.9	6	6	11000	6	12	11000
	199	139.8	232.5	253.4	4.9	4.9	6	6	9000	6	12	10600
FSV	159.5	89.4	194.3	214.0	55.1	35.4	6	6	10800	6	6	10800
	171.5	92.5	206.1	225.8	58.3	38.6	6	6	10600	6	6	10600
	187.5	96.5	221.9	241.6	62.2	42.5	6	6	9500	6	6	10200
	199	102.4	233.7	253.4	68.1	48.4	6	6	9000	6	6	10000
	219	110.2	253.4	273.1	76.0	56.3	6	6	6800	6	6	9500
	238.5	120.1	273.0	292.7	85.8	66.1	6	6	5300	6	6	9000

Note: Height of standard load backrest is 54 in.

7FGU/7FDU60 & 7FGU/7FDU70

Mast Type	Maximum Fork Height (top of forks)	Overall Height			Free Lift		7FGU/DU60			7FGU/DU70		
		Lowered	Extended				Tilt Range		Load Capacity @ 24" Load Center	Tilt Range		Load Capacity @ 24" Load Center
			Without Load Backrest	With Load Backrest	Without Load Backrest	With Load Backrest	FWD	BWD		FWD	BWD	
	in.	in.	in.	in.	in.	in.	deg.	deg.	lbs.	deg.	deg.	lbs.
V	120.5	96.9	156.7	174.5	4.9	4.9	6	10	13500	6	10	15500
	132	102.8	168.5	186.0	4.9	4.9	6	10	13500	6	10	15500
	140	106.7	176.4	194.0	4.9	4.9	6	10	13500	6	10	15500
	148	110.6	184.3	202.0	4.9	4.9	6	10	13500	6	10	15500
	179.5	130.3	215.8	233.5	4.9	4.9	6	10	13200	6	10	15500
	218.5	150.0	255.1	272.5	4.9	4.9	6	10	12500	6	10	14600
FSV	159.5	92.9	196.9	213.5	56.1	39.0	6	6	13300	6	6	15500
	171.5	96.9	208.7	225.5	60.0	42.9	6	6	12900	6	6	14800
	187.5	100.4	224.4	241.5	63.6	46.5	6	6	12400	6	6	14600
	199	110.6	236.2	253.0	73.8	56.7	6	6	11650	6	6	13700
	219	120.5	255.9	273.0	83.7	66.5	6	6	10800	6	6	12700
	238.5	122.4	275.6	292.5	85.6	68.5	6	6	9850	6	6	11600

Note: Height of standard load backrest is 54 in.

7FGU/7FDU80

Mast Type	Maximum Fork Height (top of forks)	Overall Height			Free Lift		Tilt Range		Load Capacity @ 24" Load Center
		Lowered	Extended						
			Without Load Backrest	With Load Backrest	Without Load Backrest	With Load Backrest	FWD	BWD	
	in.	in.	in.	in.	in.	in.	deg.	deg.	lbs.
V	121	102.8	160.8	175.0	5.1	5.1	6	10	17500
	132.5	106.7	172.6	186.5	5.1	5.1	6	10	17500
	140.5	110.6	180.5	194.5	5.1	5.1	6	10	17500
	148.5	120.5	188.4	202.5	5.1	5.1	6	10	17500
	180	140.2	219.9	234.0	5.1	5.1	6	10	17500

Note: Height of standard load backrest is 54 in.

Some product features described herein are optional. Please consult your dealer for specifications. Details and specifications of equipment are based on information available at the time of printing and may change without notice.

00722-71006 8/04
Litho in U.S.A. (15M)

© 2004 Toyota Material Handling, U.S.A.,Inc.
www.toyotaforklift.com

TOYOTA
INDUSTRIAL EQUIPMENT